Current part is item (4) on diagram. Available at www.oshkoshequipment.com

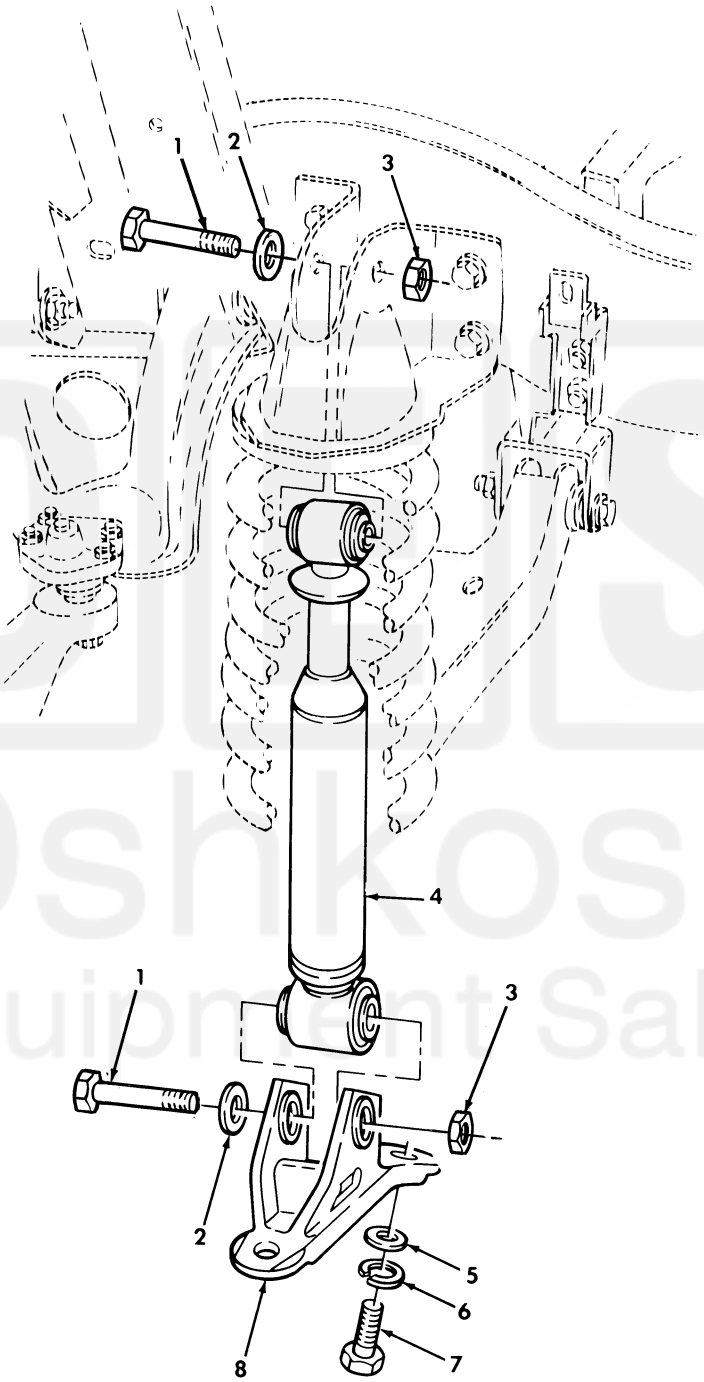

Figure 193. Shock Absorbers, Front and Rear.

Current part is item (4) on diagram. Available at www.oshkoshequipment.com

Current part is item (4) on diagram. Available at www.oshkoshequipment.com

(1) ITEM NO	(2) SMR CODE	(3) NSN	(4) CAGEC	(5) PART NUMBER	(6) DESCRIPTION AND USABLE ON CODES(UOC)	(7) QTY
					GROUP 1604 SHOCK ABSORBER EQUIPMENT	
					FIG. 193 SHOCK ABSORBERS,FRONT AND REAR	
1	PAOZZ	5365011867764	34623	5595454	BUSHING,MACHINE THR FRONT AND REAR, 1.00-14 X 3.17.....	8
2	PAOZZ	5310011873485	7X677	2065616	WASHER,FLAT 1.00.....	8
3	PAOZZ	5310014391154	34623	12339206	NUT,SELF-LOCKING,HE 1.00-14.....	8
4	PAOZZ	2510011903862	76445	70113	SHOCK ABSORBER,DIRE FRONT SUSPENSION.....	2
4	PAOZZ	2510012515316	76445	70114	SHOCK ABSORBER,DIRE REAR H.D..... UOC:AVY,A11,A13,A14,A15,A20,A24,A25, A26,A27,BVY,B15,B16,B17,B18,B20,B24, B25,C17,HVY,H15,H16,H21,H28,NNN	2
4	PAOZZ	2510011891832	76445	70112	SHOCK ABSORBER,DIRE REAR..... UOC:H11,H13,H14,H17,H18,H20,H24,H25, H26,H27,MMM	2
5	PAOZZ	5310008238803	96906	MS27183-21	WASHER,FLAT 5/8.....	8
6	PAOZZ	5310008206653	96906	MS35338-50	WASHER,LOCK 5/8.....	8
7	PAOZZ	5306012552661	7X677	9424760	BOLT,MACHINE 5/8-11 X 2.00.....	8
8	PAOZZ	2510011877037	19207	12338315	BRACKET,SHOCK MOUNT.....	4

END OF FIGURE

Current part is item (4) on diagram. Available at www.oshkoshequipment.com